MightyVent AF

INSTALLATION INSTRUCTIONS

A MAJOR CAUSE OF CHIMNEY-RELATED FIRES IS FAILURE TO MAINTAIN REQUIRED CLEARANCES (AIR SPACES) TO COMBUSTIBLE MATERIALS. IT IS OF THE UTMOST IMPORTANCE THAT THIS CHIMNEY BE INSTALLED ONLY IN ACCORDANCE WITH THESE INSTRUCTIONS.

Read through these instructions before beginning your installation. Failure to install the chimney as described in these instructions will void the manufacturer's warranty and may affect your homeowner's insurance and UL listing status. Keep these instructions for future use.

REPORT NUMBER 0523MP0015

For the most up-to-date installation instructions and other resources, visit our website at mightyvent.com. If you have any questions or comments about our products, please contact us directly at support@mightyvent.com or 208-352-6733.

MightyVent LLC
9740 North Biztown Loop
Hayden, Idaho 83835

Table Of Contents

Clearances 2
Permits 2
MightyVent AF Application 2
Chimney Diameter 2
Chimney Height 2
Chimney Placement 3
Chimney Enclosure Requirements 3
Appliance Recommendations 4
Step By Step Directions 5
- Ceiling Supported Installations 6
  - Structures with an attic and multi-story installations
- Offset Elbow Installation 13
- Extended Roof Support Bracket Installation 15
- Roof Supported Installations 16
  - Square Ceiling Support Box 16
    - Structures with little or no attic space and closed framing
  - Roof Support Bracket 17
    - Structures with open framing, vessels, and others not using a ceiling support box
- Tee-Supported Installations 19
  - Structures requiring a wall pass-through
- Masonry Fireplace Installations 23
  - Site-built masonry fireplaces
- Zero-Clearance Fireplace Installations 25
  - Factory-built fireplaces

Chimney Maintenance 25
Warranty 27

Clearances

Always allow at least a **2-inch clearance** between MightyVent AF chimney pipe and any combustible materials. Never fill any required clearance space with insulation or any other materials. Combustible materials include lumber, plywood, sheetrock, plaster and lath, furniture, curtains, electrical wiring, and combustible building insulation, including paper-faced insulation, cellulose, natural fibers, and foam (including fire-rated foam). Keep single-wall stovepipe at least **18 inches** away from combustible materials unless a clearance reduction system that is acceptable to the authority having jurisdiction is used, or the appliance to be installed is listed (e.g. UL or CSA) and the instructions specify a different clearance.

Permits

Contact your local Building Official or Fire Official regarding permits, restrictions, and installation inspections in your area.

MightyVent AF Application

MightyVent AF is a **UL 103 Type HT** all-fuel double-wall insulated Class A chimney system, which can be used with wood stoves, wood-fired ovens, fireplaces, fireboxes, furnaces, boilers, water heaters, stoves, ranges, or other residential-type appliances fueled by oil, gas, coal, or wood, that require a natural draft chimney system. Do **NOT** use MightyVent AF chimney with forced draft, positive-pressure appliances.

Chimney Diameter

Follow the appliance manufacturer's instructions to determine chimney diameter and clearances between combustible materials and your heating appliance. Never choose a chimney with an inside diameter smaller than your appliance's outlet. To calculate the chimney's outside diameter, add 2 inches to the inside diameter.

Chimney Height

According to the National Fire Protection Association Standard #211, "Chimneys shall extend at least three feet above the highest point where it

passes through the roof of a building, and at least two feet higher than any portion of a building within ten feet" (Fig 1). If the chimney extends more than 5 feet above the roof, an Extended Roof Support Bracket must be used (see page 15). Due to the overlap of joints, subtract 1 ⅛ inches from each Chimney Section's height to calculate the total installed height.

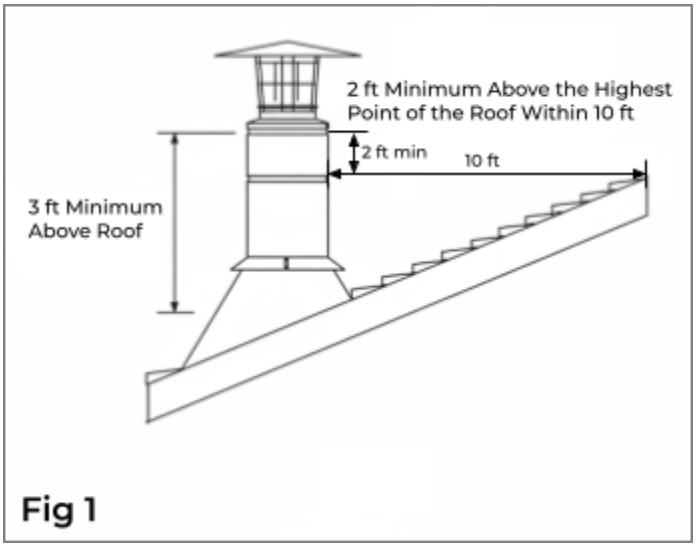

Fig 1

The chimney opening shall be at least **10 feet** away from adjacent walls or buildings.

The Tee Support can hold a maximum of **50 feet** of MightyVent AF Chimney. The required parts and general configuration are as shown in Figures 21 and 22.

The Roof Support Bracket can support a maximum of **45 feet** of MightyVent AF total, and a maximum of **20 feet** below the support.

Chimney Placement

When deciding the location of your chimney, try to avoid modifications to roof beams, trusses, wall studs, and other structural components of the building.

Chimney Enclosure Requirements

Passing Through Rooms: Interior chimneys shall be enclosed where they extend through closets, storage areas, occupied spaces, or any place where the surface of the chimney could be contacted by a person or combustible materials. The space between the outer wall of the chimney and the enclosure shall be at least 2 inches (Fig 2).

Multi-Story Installations: Consult local building codes for requirements in your area. In the U.S., the National Fire Protection Association Standard #211 states, "Factory-built chimneys that pass through floors of buildings

requiring the protection of vertical openings shall be enclosed with approved walls having a fire resistance rating of not less than one hour when such chimneys are located in a building less than 4 stories in height, and not less than 2 hours when such chimneys are located in a building more than 4 stories in height." In Canada, except in single-family and two-family dwellings, chimneys that extend through another story must have an enclosure with a fire resistance rating equal to or greater than that of the floor or roof assembly through which they pass.

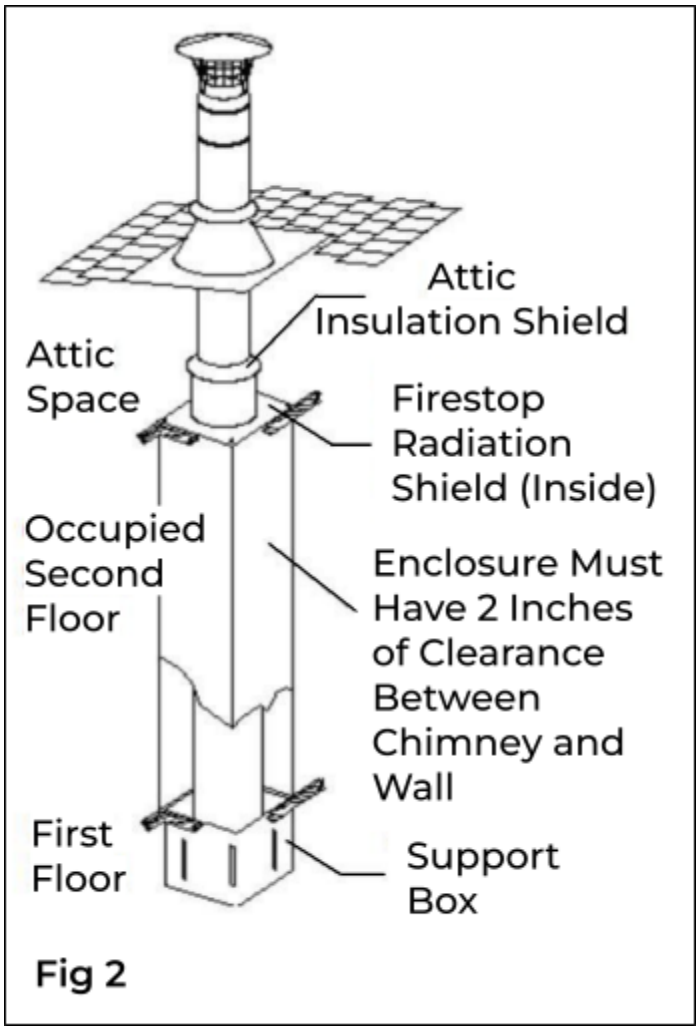

Fig 2

Cold Climates: In cold climates, chimneys mounted on an outside wall should be enclosed in a chase. Exterior chases reduce condensation and creosote formation, and enhance draft. Include an access door by the Tee Cap for chimney cleaning (refer to Fig 21, pg 20).

Appliance Recommendations

Follow the appliance manufacturer's instructions. The requirements stated below pertain to all stoves or other appliances installed with MightyVent AF systems.

Choice: Choose an appliance that is appropriate for your needs, and is not larger than required. Depending on your structure and appliance type, you may need an appliance that is EPA-approved and/or listed by a recognized testing laboratory.

Installation: Once the chimney system is in place, install the stove pipe to connect the appliance to the chimney as described in the appliance manufacturer's instructions. Be sure to maintain all required clearances.

Flues: Connect only one appliance per chimney.

Operation: Follow the appliance manufacturer's instructions for maximum efficiency and safety. Over-firing can damage the appliance, stovepipe, and chimney.

Fuels: Do not burn driftwood, plastic, or chemically treated wood such as railroad ties. They are corrosive to your appliance, stovepipe, and chimney. Follow the appliance manufacturer's instructions and safety manual regarding fuel selection. Not all solid fuel appliances are equipped to burn coal. Coal with low sulfur content reduces the risk of corrosion.

Mobile Homes: Please read the appliance manufacturer's instructions and safety manual carefully. Not all appliances are listed for use in mobile homes.

Step-By-Step Directions

There are five general types of MightyVent AF installations:

1. **Ceiling-supported**. Typically used for structures with an attic or multi-story installations.
2. **Roof-supported**.
    a. With the square ceiling support box, typically used for structures with little or no attic space and closed framing.
    b. With the roof support bracket, typically used for structures with open framing, vessels, and others not using a ceiling support box.
3. **Tee-supported.** Used for structures requiring a wall pass-through.
4. **Masonry Fireplace**. Used to vent a site-built masonry fireplace.
5. **Zero-Clearance Fireplace**. Used to vent a factory-built fireplace.

Review the step-by-step directions before beginning your installation.

Ceiling Supported Installations

1. **Place Appliance:** Position the appliance according to the manufacturer's instructions. The flue outlet collar should be placed between the rafters or joists above, if possible.

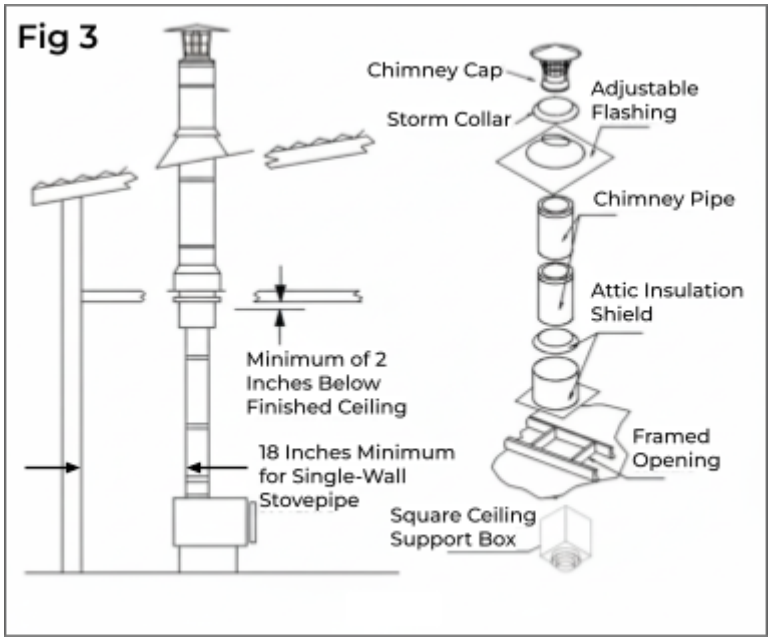

2. **Frame Support Opening:** Drop a plumb bob to the center of the appliance's flue outlet and mark the center point on the ceiling. Refer to Table 1 for specific framing and clearance dimensions. Mark appropriate cutting lines on the ceiling around the center point. Cut a square hole in the ceiling for the Ceiling Support Box to pass through. Frame a level, square opening centered over the hole which you have cut between the joists (Fig 3 & 4).

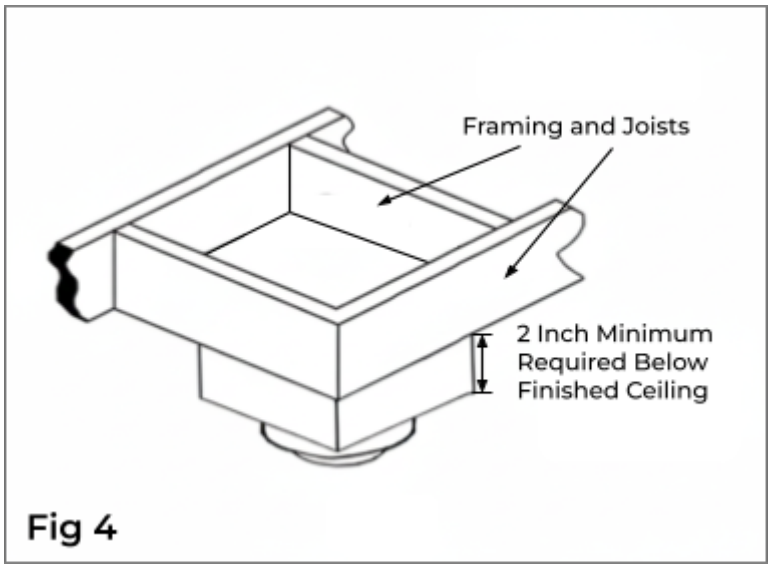

Table 1 - Framed Dimensions for Square Ceiling Support Box, Wall Thimble, and Radiation Shield

Chimney Size	4 in	5 in	6 in	8 in
Framed Opening Inside Dimensions (inches)	10 ½ x 10 ½	11 ½ x 11 ½	12 ½ x 12 ½	14 ½ x 14 ½

3. **Flat Ceiling Support Box Installation:** For a flat ceiling installation, use the Square Ceiling Support Box and Trim. The bottom of the Square Ceiling Support Box must extend at least 2 inches below the finished ceiling (measured to the bottom of the box not including the round adapter section, Fig 5).

   Level the Support Box and secure it to the framing using at least three 8-penny nails per side (min. of 12 total). Alternatively, you may use 1-½" #8 wood screws (min. of 12 total), instead of nails. Next, secure the Trim Collar to the framing members using the provided hardware.

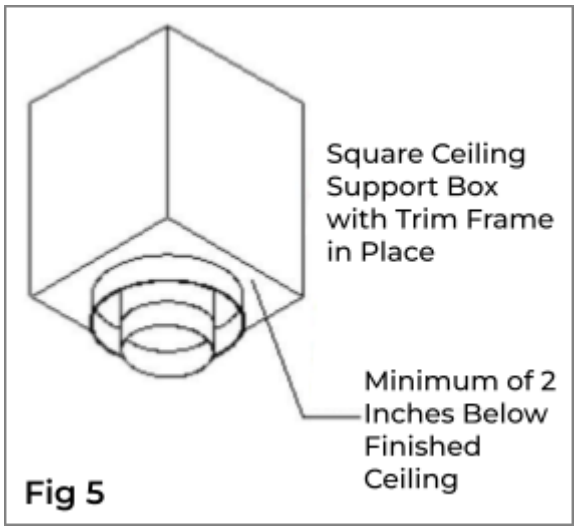

Fig 5

Vaulted Ceiling Support Box Installation: For a vaulted ceiling installation, use the 24" or 36" Square Ceiling Support Box and Trim. The bottom of the Support Box must be a minimum of 2 inches below the finished ceiling at the lowest side of the penetration (measured to the bottom of the box not including the round adapter section, Fig 5).

Level the Support Box and secure it to the framing using at least three 8-penny nails per side (minimum of 12 total). Alternatively, you may use 1-½" #8 wood screws (minimum of 12 total), instead of nails. Next, secure the Trim Collar to the framing members using the provided hardware. You will need to construct a separate frame for the Attic

Insulation Shield if the chimney is not fully enclosed in a chase.

Cathedral Ceiling Support Box Installation: For a cathedral ceiling installation, use the 24" or 36" Square Ceiling Support Box and Trim. The bottom of the Support Box must be a minimum of 2 inches below the finished ceiling at the lowest side of the penetration (measured to the bottom of the box not including the round adapter section, Fig 5).

Level the Support Box and secure it to the framing using at least three 8-penny nails per side (minimum of 12 total). Alternatively, you may use 1-½" #8 wood screws (minimum of 12 total), instead of nails. Next, secure the Trim Collar to the framing members using the provided hardware.

4. **Multi-Story Installation - Frame Openings:** Frame openings in each ceiling or floor above the Support Box (Fig 6). These openings are to hold the Firestop Radiation Shields and Attic Insulation Shields. Locate each opening by dropping a plumb bob to the four corners of the opening below. Maintain the minimum clearances and dimensions as specified in **Table 1**. If Elbows must be used to avoid an obstruction, refer to the Offset Elbow Installation section (pg 13).

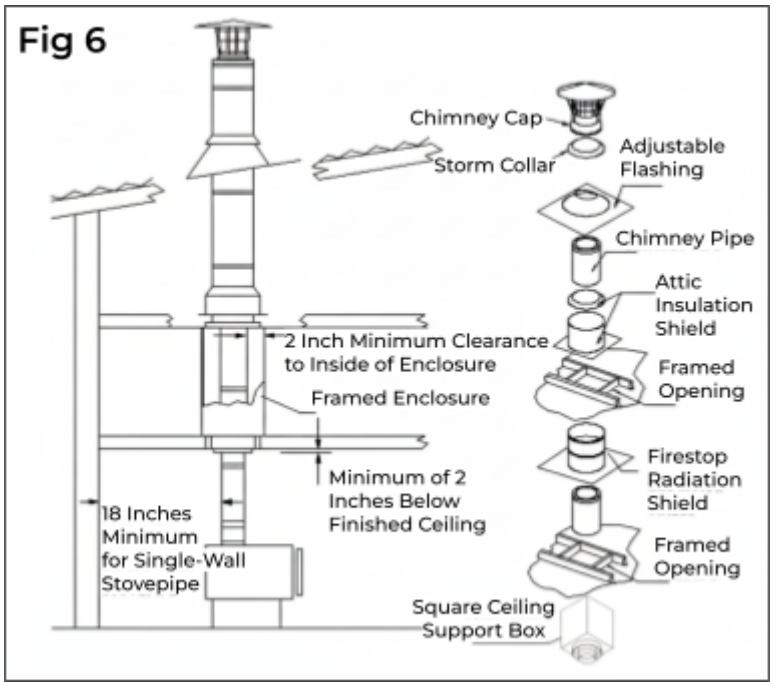

5. **Cut Roof Opening:** Verify that your roof flashing will cover the roof opening before cutting. Cut an opening in the roof directly above the opening below and at least 4 inches larger than the chimney's outside

diameter to provide at least a 2 inch clearance all around the chimney. The chimney must be centered within this opening and maintain the 2 inch clearance to combustibles.

6. **Install Radiation Shield:** A Firestop Radiation Shield is required in multistory installations at each floor penetration above that where the Support Box is located. Example: in a multistory home where the appliance is on the ground floor (Support Box is in the 1st floor ceiling), you would need a Radiation Shield at the 2nd floor ceiling, and at the 3rd floor ceiling, etc., including where the chimney penetrates into the attic. Figure 6 shows a typical 2-story installation with an attic. Note: a Radiation Shield is **NOT** installed where the chimney penetrates through the roof. The Radiation Shield is installed on the underside of the ceiling/floor framing, with the cylindrical “tube” portion of the shield pointing upward (Fig 7). Use a minimum of either (1) 8 penny nail or (1) 1-½” #8 wood screws per corner. Refer to **Table 1** for framing requirements.

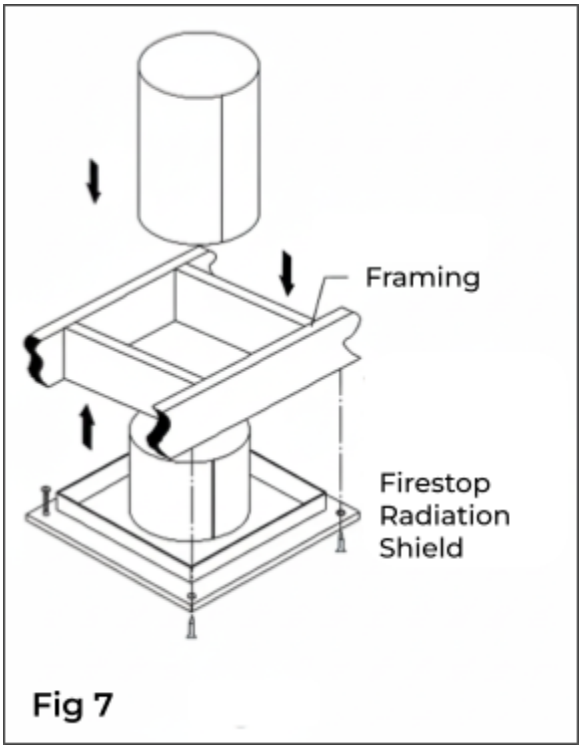

Fig 7

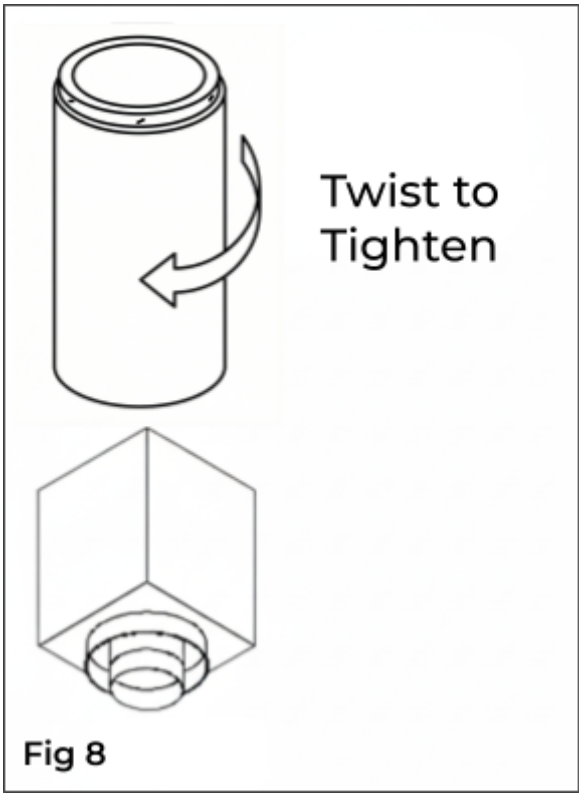

Fig 8

7. **Assemble Chimney Sections:** Lower the female end of the first Chimney Section in the Support Box (Fig 8). It will twist-lock clockwise onto the male end of

the Support Box. Turn Pipe Sections firmly clockwise to lock them together, then secure the joint with a Chimney Pipe Clamp. Sheet metal screws are not required, but they may be used to reinforce the connection, if desired. Use only ½" (or shorter) sheet metal screws. Do not penetrate the inner liner of the chimney.

8. **Install Attic Insulation Shield:** Install the Attic Insulation Shield where the chimney passes into an attic. Its purpose is to prevent debris and insulation from getting too close to the chimney (Fig 9). An installed Attic Insulation Shield is 15 inches high. In attic areas where this shield cannot fit, a Square Ceiling Support Box, (which are available in heights of 11", 24", and 36"), can be used instead of an Attic Insulation Shield, provided it reaches through the roof; refer to the Roof Supported Installation section on page 16. If the chimney is fully enclosed through the attic, an Attic Insulation Shield is not required.

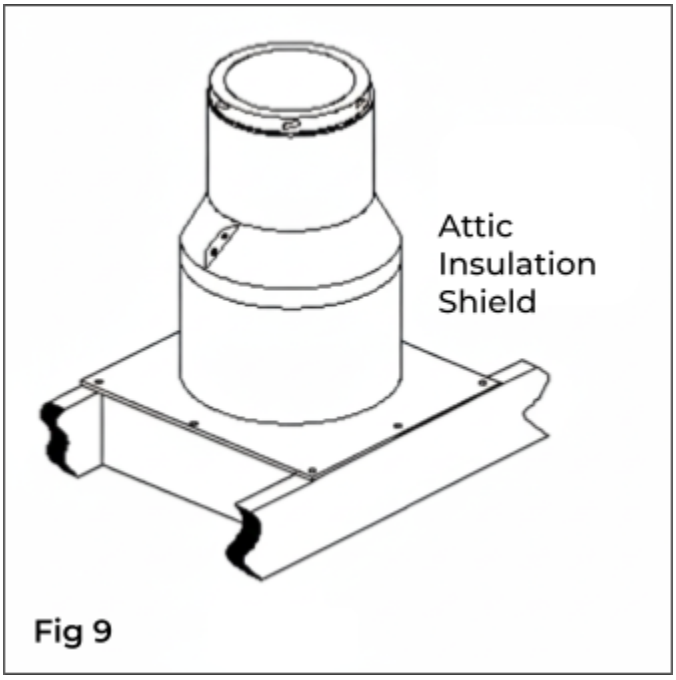

Fig 9

9. Where the chimney passes into the attic, install the Attic Insulation Shield as follows:
    1. If the Firestop Radiation Shield extends above the attic floor, no modifications are necessary. The Firestop Radiation Shield will fit inside the Attic Insulation Shield.
    2. Assemble Chimney Sections until at least 18 inches of chimney extends above the Firestop Radiation Shield.
    3. Extend the Firestop Radiation Shield tube extension (keep at least 1" overlap), and secure in place using sheet metal screws.
    4. Slip the Attic Insulation Shield over the Chimney and Firestop Radiation Shield until the base sits squarely on the framed opening (Fig 6 & 9).

5. Secure the Attic Insulation Shield to the top of the framed opening using at least (3) 8-penny nails or (3) 1-½" #8 wood screws per side (Fig 9).
6. Wrap the Collar of the Attic Insulation Shield around the chimney and fasten it loosely with the supplied hardware. Slide the Collar down to meet the Attic Insulation Shield. Tighten the hardware to secure the Collar.

10. **Attach Roof Flashing:** In new construction, or if using a surface-mount Pipe Boot, assemble the Chimney Sections to a point above the roof, then slip the Roof Flashing or Pipe Boot over the chimney.

    When installing a high-temperature silicone Pipe Boot, using soapy water as a lubricant may help the boot slide on. However, you must ensure both surfaces are clean and dry prior to fastening the boot to the roof. Apply sealant to the underside of the boot flange, then fasten the flange in place with appropriate fasteners for the roofing material, spaced 1 to 1-½ inches apart. Always ensure the chimney remains vertical (use a level), and that at least a 2 inch clearance to combustible materials is maintained all around. Apply sealant around the perimeter of the flange and over top of each fastener.

    On an existing roof where the flashing must be layered into the previously installed roofing material, center and install the Roof Flashing before extending the chimney above the roof. Allow space to permit sliding the next Chimney Section up through the Roof Flashing. Always ensure the chimney remains vertical (use a level), and that at least a 2 inch clearance to combustible materials is maintained all around. Install the upper edge of the Roof Flashing under the roofing. Nail to the roof along the upper edge and down each side

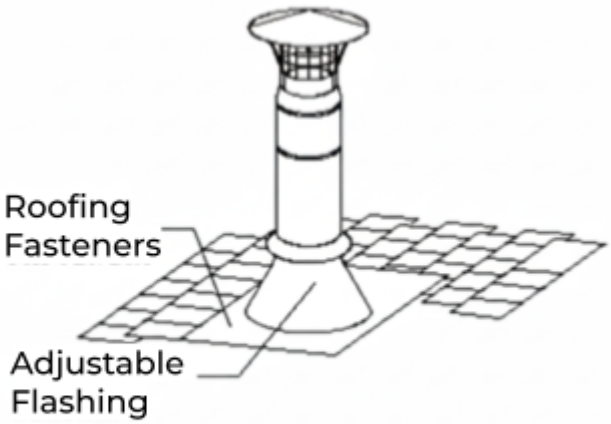

Fig 10

with 1 inch roof nails. Do not nail the lower edge of the Flashing (Fig 10). Be sure to follow local building practices as needed. Seal all nail heads with a non-hardening waterproof sealant. On flat or tarred and gravel roofs, nail and seal the Flat Roof Flashing to the roof on all sides of the roofing compound. Do not put screws through the Roof Flashing into the Chimney Pipe.

11. **Finish Top:** A storm collar is required when using a rigid metal flashing, and optional when using a silicone pipe boot. Apply a high-temperature (500°F), non-hardening waterproof sealant around the chimney at the point where the Storm Collar will meet the chimney just above the Roof Flashing (Fig 10 & 11). Slide the Storm Collar down over the chimney to the tab of the Roof Flashing. Tighten and seal the Storm Collar against the sealant. After installing sufficient Chimney Sections to meet the height requirement (Fig 1), attach the Chimney Cap on top of the chimney by holding the collar of the cap and twist locking it clockwise onto the chimney. Do not hold the upper portion of the cap and twist, as this may damage the cap. The Chimney Cap can be removed for chimney cleaning as described in the Chimney Maintenance section of the instructions. Use an Extended Roof Brace if the chimney extends more than 5 feet above the roof (Fig 13 & 14).

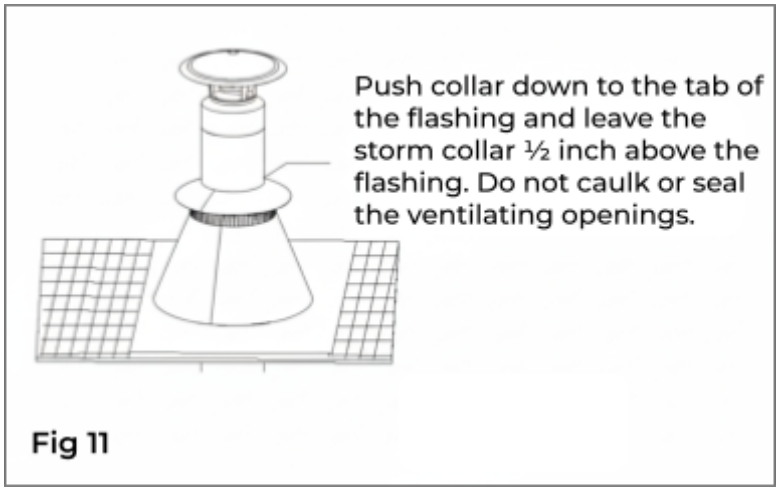

Fig 11

12. **Enclosures:** Enclose chimneys where they pass through occupied spaces, including closets. Always maintain at least a 2 inch clearance between the chimney and any combustible materials. Interior enclosures may be constructed with standard framing and sheathed with sheetrock or plywood. Use Wall Brackets as needed to maintain a minimum of 2 inches of air space (clearance) between the chimney and combustible materials.

Offset Elbow Installation

Elbows are manufactured in 15° and 30° angles measured from the vertical. A 30° Elbow is the maximum angle that can be used in an offset. A 30° Elbow may **NOT** be combined with a 15° Elbow to make a 45° offset. Avoid Elbows if possible, since a totally vertical chimney is more efficient. When Elbows are necessary to avoid obstructions such as rafters, ridgepoles, or joists, use **no more than two 30° offsets** (four elbows total) in any one chimney system.

1. **Attach Elbows:** Attach Elbow to Chimney Section or other Elbow. Please note that the female end of the elbows are not lanced in order to ensure proper alignment of the chimney system can be maintained. Chimney Pipe Clamps are included and must be used at all chimney joints. Attach one Elbow to the Chimney Section below, and align it for the offset. Refer to **Table 2** to determine the required offset length and attach an appropriate length (or lengths) of Chimney Section(s) above the Elbow. Notes: In practice, offset dimensions may vary by up to 1 inch. Always site-verify dimensions before installation. A maximum of two chimney sections can be connected between elbows. The maximum length of chimney pipe between elbows is not to exceed 72”. Attach the second Elbow above the Chimney Section to complete the offset (Fig 12).

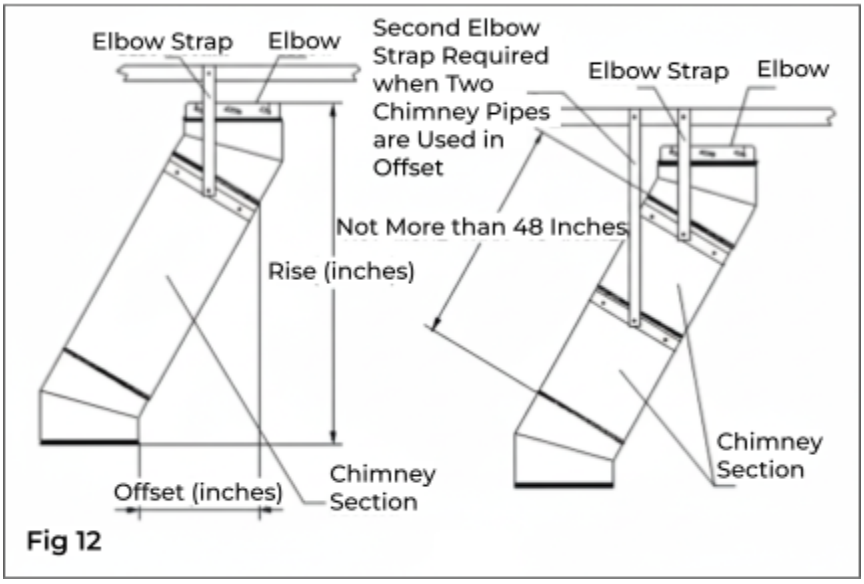

Fig 12

2. **Secure Offset:** Place the Elbow Strap’s band around the angled portion of the top Elbow, then tighten the nut and bolt until the clamp is firm. Wrap the Elbow Strap end over an adjacent joist or rafter and secure it with at least (2) 8-penny nails or (2) 1-½” #8 screws. Do not add more Chimney

Sections until the Elbows are supported. Be sure that the chimney remains vertical. If there is more than one Chimney Section between the Elbows, install a second Elbow Strap around the joint of the two Chimney Sections (Fig 12).

Table 2 - Approximate assembled elbow offset and rise dimensions

		MightyVent 4 inch		MightyVent 5 inch		MightyVent 6 inch		MightyVent 8 inch	
	Length Between Elbows (inches)	Offset (inches)	Rise (inches)	Offset (inches)	Rise (inches)	Offset (inches)	Rise (inches)	Offset (inches)	Rise (inches)
15°	0	¾	13	¾	12 ¾	¾	12 ½	¾	13
	10	3 ½	22 ¾	3 ½	22 ½	3 ½	22 ¼	3 ½	22 ½
	15	4 ¾	27 ½	4 ¾	27 ¼	4 ¾	27	4 ¾	27 ¼
	20	6	32 ¼	6	32	6	31 ¾	6	32 ¼
	15+15 *	8 ¼	40 ⅞	8 ¼	40 ⅝	8 ¼	40 ⅜	8 ¼	40 ⅞
	30	8 ½	42	8 ½	41 ¾	8 ½	41 ½	8 ½	42
	40	11 ¼	51 ¾	11 ¼	51 ½	11 ¼	51 ¼	11 ¼	51 ½
30°	0	1 ½	13 ½	1 ½	13	1 ½	12 ¾	1 ½	14 ½
	10	6 ½	22 ¼	6 ½	21 ¾	6 ½	21 ¼	6 ½	23
	15	9	26 ½	9	26	9	25 ¾	9	27 ¼
	20	11 ½	30 ¾	11 ½	30 ½	11 ½	30	11 ½	31 ¾
	15+15 *	16	38 ½	16	38	16	37 ¾	16	39 ¼
	30	16 ½	39 ½	16 ½	39	16 ½	38 ¾	16 ½	40 ¼
	40	21 ½	48 ¼	21 ½	47 ¾	21 ½	47 ¼	21 ½	49

* Joining 15+15 inch or 10+20 inch chimney sections results in a 28 ⅞ inch length because of the 1 ⅛ inch in overlap at the joint. See Chimney Height section (pg 2).

Extended Roof Support Bracket Installation

If the chimney extends more than 5 feet above the roofline, an Extended Roof Support Bracket must be installed at every 5-foot increment of chimney height above the roofline, leaving no more than 5 feet of chimney extending above the last Extended Roof Support Bracket. The Extended Roof Support Bracket consists of the Pipe Band, the Adjustable Legs, and the Roof Brackets.

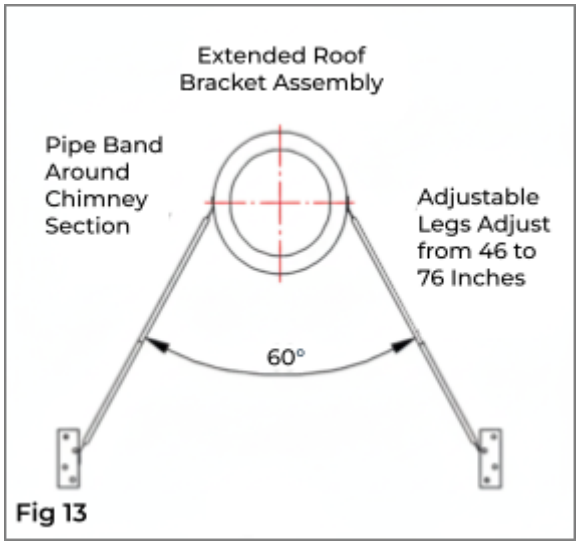

Fig 13

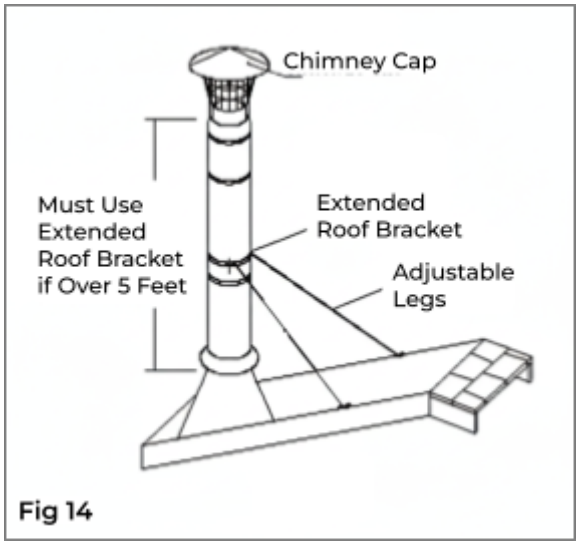

Fig 14

1. Mount Pipe Band: Slip the Pipe Band around the chimney and secure it by tightening the nut and bolt.

2. Attach the Legs: The Adjustable Legs of the assembly will adjust from 46” to 76”. Secure one end of the Legs to the Pipe Band using the nuts and bolts included (1 per leg). Position the Adjustable Legs so they form approximately a 60° angle with the chimney, and with each other (Fig 13 & 14). Be sure that there is at least 3” of overlap between the top and bottom halves of the Adjustable Leg. In order to secure Legs in proper position, there is a hole provided in the outer leg where the outer and inner halves overlap. Use a ¼” drill bit to drill through the inner leg at that location. Use the nut & bolt provided to pin the Adjustable Legs in position.

3. Install Roof Bracket: Mount the two Brackets where each of the adjustable legs meets the roof, using (6) 1” roofing nails per bracket. Seal the nail heads carefully with a non-hardening, waterproof sealant.

Attach the bottom end of the Adjustable Legs to the Roof Brackets using the nuts & bolts provided.

Roof Supported Installations

There are two types of Roof Supported Installations: Using a Square Ceiling Support Box and using a Roof Support Bracket.

Square Ceiling Support Box

For a Square Ceiling Support Box installation, make sure that the square box portion of the Support Box can extend at least 2" below the low side of the finished ceiling (Fig 15). The Support Box must remain level, and the top edge of the box must cover the edge of the roof's decking material. Mobile home chimney installations are roof supported. Do **NOT** seal openings in flashing.

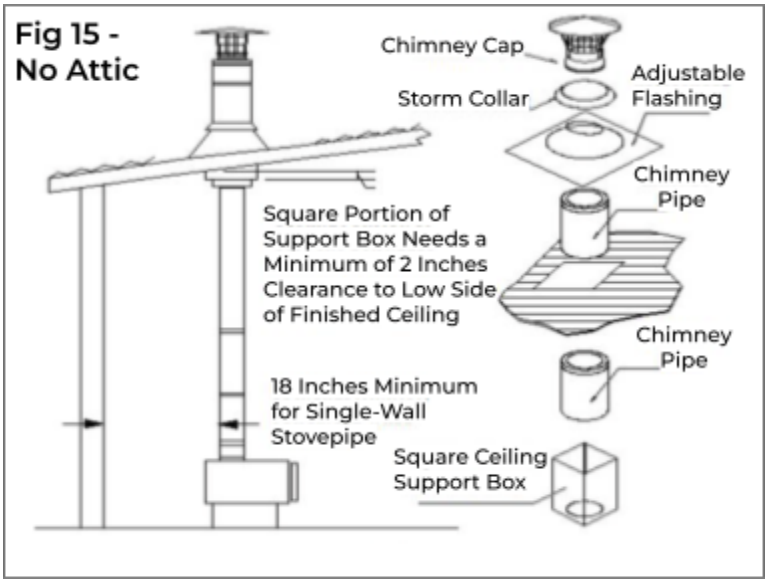

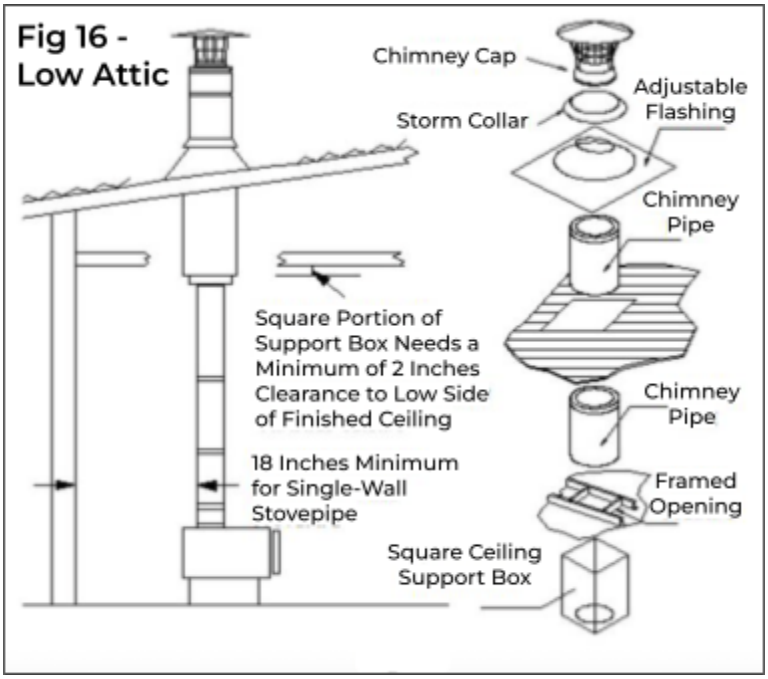

1. Place Appliance: Place the appliance in its proper location, referring to the manufacturer's instructions as to allowable distances from combustibles, etc.

2. Cut Openings: Cut a roof opening in your desired location, just as in a Ceiling Supported Installation (Steps 1

through 5, pp 6-9). If a separate ceiling and roof exists, as shown in Figure 16 (Low Attic), first cut and frame a ceiling opening as described in Ceiling Supported Installations (Step 2, pg 6). Refer to Table 1 on page 7 for clearance and framing specifications. If installing through a cathedral ceiling refer to Fig 15, the hole is cut directly in the roof.

3. Install Square Ceiling Support Box: Slip the Square Ceiling Support Box into the framed opening so the square portion projects at least 2 inches below the finished ceiling and rafters, and extends above the ceiling to framing or decking materials that it can be nailed to. Level the Support Box, and slit the corners to the roofline where they extend beyond it. Secure using (3) 8-penny nails, or (3) 1-½" #8 screws, per side (Fig 17).

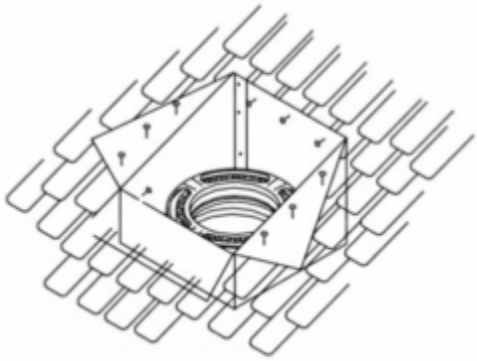

Fig 17

4. **Complete Installation:** Refer to Steps 7, 9 & 10 (pages 9-11) in the Ceiling Supported Installation section to complete the Roof Supported installation.

Roof Support Bracket

A Roof Support Bracket is used in installations where a Square Ceiling Support is **not** desired, like vessels, unfinished buildings, workshops, or garages. The Roof Support Bracket allows the MightyVent AF chimney pipe to extend into the room below the ceiling level (Fig 18). The Roof Support Bracket can support a maximum of 45 feet of

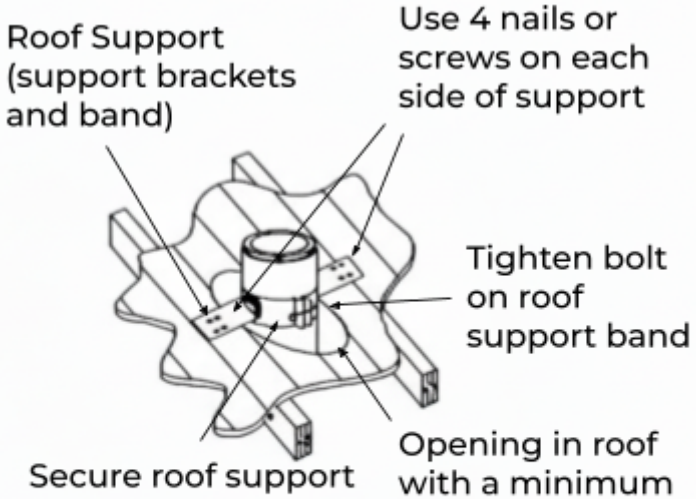

Fig 18 - Roof Support Bracket

MightyVent AF total, and a maximum of 20 feet below the support.

1. Cut and frame the opening in the roof to provide a minimum of 2” clearance on all sides of the chimney pipe.

2. Bolt on the Roof Support Brackets to the Roof Support Band using the supplied hardware. Attach the Roof Support Brackets to the roof using (4) 8-penny nails or (4) 1-½” #8 screws per side (Fig 18).

3. Determine how much the MightyVent AF chimney will extend into the room (minimum of 3” below the finished ceiling). Be sure to maintain the proper clearance to combustibles (walls and ceilings) for the connector pipe. Once you have identified the proper height for your installation, attach the Roof Support Band to the Chimney Section by tightening the bolt and securing the band to the chimney with the supplied sheet metal screws. Install a Ceiling Trim Plate on the finished ceiling if desired.

   Attach desired length of Chimney Sections above and below the roof level (max. of 45’ total, 20’ max below the support) (Fig 18).

4. Refer to Steps 9 & 10 in the Ceiling Supported Installation section (page 10 & 11) to complete the Roof Supported installation.

An Alternative Installation Location for the Roof Support Bracket: The Roof Support Bracket may be used at the bottom of a chimney installation (Fig 19). This may be useful for some basement installations. Maintain a minimum of 2” clearance to combustibles at all times. The MightyVent AF chimney needs to extend a minimum of 3” below the finished ceiling or exposed framing members. Please note that you cannot extend the chimney all the way to the appliance - you must have a stove pipe

Fig 19

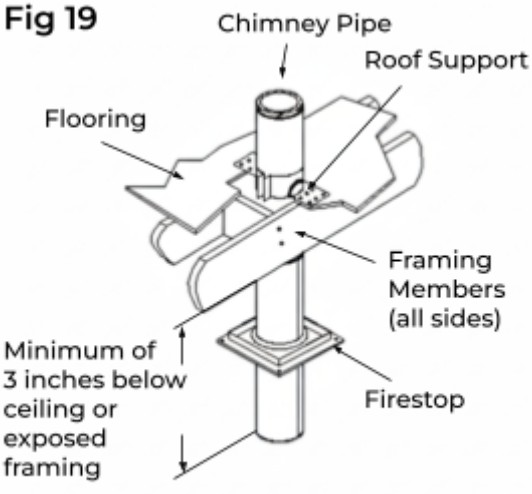

adapter and connector pipe at some point of the installation to attach to the collar of your appliance.

1. Cut and frame opening to provide a minimum of 2” clearance on all sides of the chimney. Be sure to maintain the proper clearance to combustibles for the connector pipe.

2. Bolt on the Roof Support Brackets to the Roof Support Band using the supplied hardware. Attach the Roof Support Brackets to the floor joists using (4) 8-penny nails or (4) 1-½” #8 screws per side (Fig 19).

3. Determine how much MightyVent AF chimney will be extending into the room (minimum of 3” below the framing), and attach the Roof Support Band to the chimney section by tightening the bolt. Secure it with the supplied hardware.

4. Install a Firestop Radiation Shield below the finished ceiling or framing members. **Note:** You will need to modify the Firestop Radiation Shield by cutting down the metal cylinder to fit below the Roof Support Bracket. The modified Firestop Radiation Shield can only be used when installed with the Roof Support Bracket in this type of installation. Use a standard Firestop Radiation Shield at all other locations where the chimney passes through a floor or ceiling (including where the chimney passes into the attic if applicable).

5. Refer to steps 7-10 in the Ceiling Supported Installation section to complete the Roof Supported Installation (page 9-11).

Tee-Supported Installations

Tee-supported installations are used when passing through a wall to an outside chimney. The Tee Support can hold up to 50 feet of MightyVent AF chimney. The required parts and general configuration are as shown in Figures 20 & 21.

1. **Place Appliance:** Position the appliance according to the manufacturer’s instructions. It is a good idea to try to position the appliance so it will allow the chimney to line up centered between

studs.

2. **Locate, Cut & Frame Opening:** Determine the location where the chimney will pass through the wall. The chimney should pass through the wall centered between two studs. The height of the penetration can be determined by positioning sections of stove pipe until you have a desired configuration (refer to the appliance manufacturer's installation instructions for restrictions on stove pipe). Cut and frame an opening in the inner and outer walls at this location. Refer to Table 1 (pg 7) for the appropriate framing dimensions.

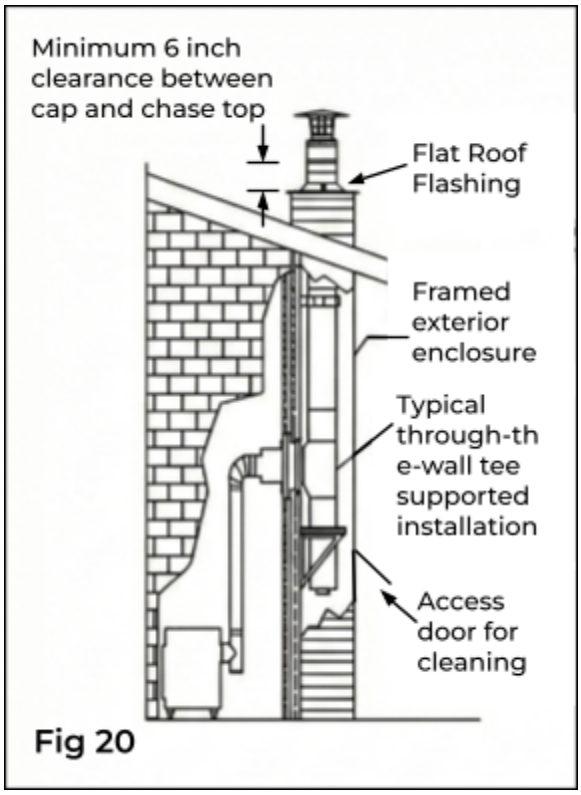

Fig 20

3. **Install Wall Thimble:** From the outside wall, put the outer half of the Wall Thimble in the opening. Center the outer half of the Wall Thimble. Secure the Wall Thimble to the outside wall with at least (4) 8-penny nails or (4) 1-½" #8 screws. For fully noncombustible concrete walls, a Wall Thimble is not required. The hole in the wall should be just large enough for the chimney pipe to pass through. Install the inner half (with round plate) of the Wall Thimble in the inside wall surface, ensuring that the shield slides into the shield of the outer half. Secure the Wall Thimble to the inside

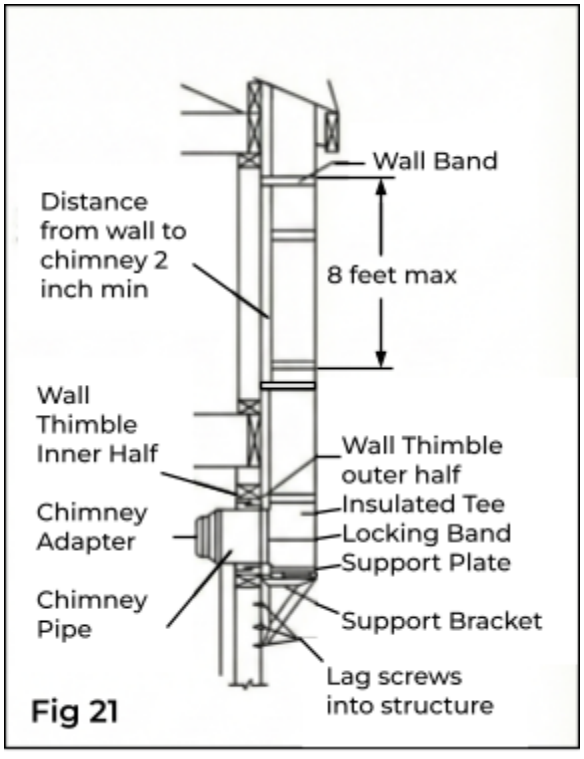

Fig 21

wall with at least (4) 8-penny nails or (4) 1-½" #8 screws.

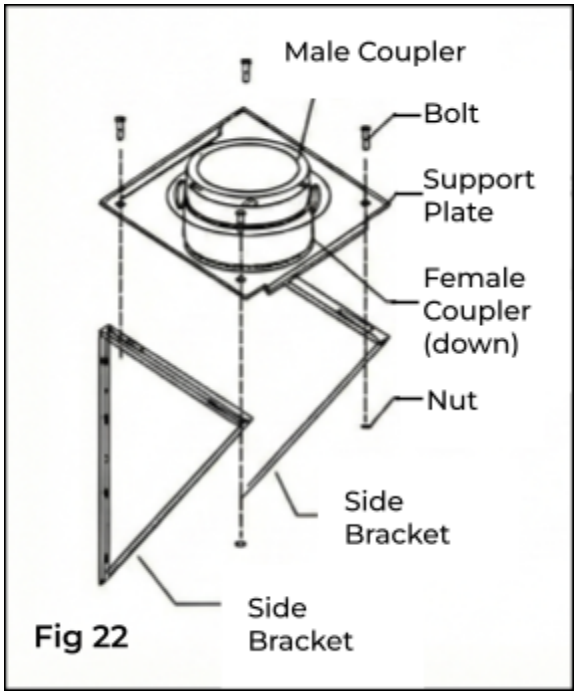

Fig 22

4. **Install Base Wall Support, Tee and Tee Cap:** Assemble the Base Wall Support Kit (Fig 22) by attaching the 2 triangle brackets to the support plate, with the hardware supplied (female coupler of the insulated coupling section on the Base Plate faces down, male end faces up). Install one 10" Chimney Section (or longer as required) to the horizontal branch of the insulated Tee. Lock securely into the Tee by twisting clockwise. A Chimney Pipe Clamp (included) must be installed at this connection. Make sure the clamp is facing down to prevent any water from collecting in the Chimney Pipe Clamp.

From outside the building, slide the chimney length (previously installed on the Tee) through the Wall Thimble, ensuring the male coupling on the Tee is facing upward.

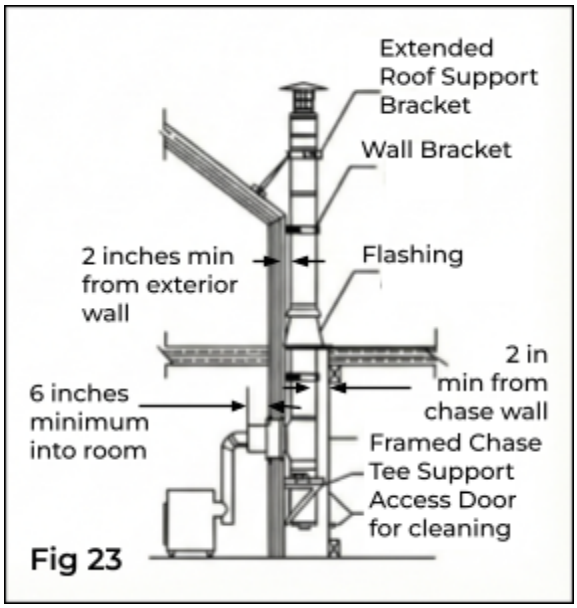

Fig 23

Install the male coupler of the insulated coupling section on the support plate into the female coupler of the Tee. Lock securely into the Tee by twisting clockwise. Place the assembled Wall Support against the wall (plate up) directly below the insulated coupling section of the Wall Support. Tighten the insulated coupling section and the support plate with the supplied lag screws (#14 x 2").

Then secure the whole Base Wall Support assembly onto the wall using #14 x 2” wood screws through the pre-punched slots in each bracket. **Important:** Verify that the Base Wall Support is level, and secure the leg brackets of the Tee Support to the wall (Fig 23). Finally, install the Tee Cap into the female coupler of the insulated coupling section. Lock securely by twisting clockwise.

5. **Complete Chimney:** Attach the chimney sections as in Step 7 in the Ceiling Supported Installation section (Page 9). Secure the chimney to the wall with Wall Brackets at a minimum of 8-foot intervals and maintain at least 2 inches of clearance to combustible materials. Slip the Wall Brackets around the chimney, tighten the bolts, adjust the clearance, and fasten the Wall Brackets to the wall. Once the chimney is at a minimum height specified in Figure 1, attach the Chimney Cap onto the top of the chimney by holding it by the collar and twist locking it clockwise onto the Chimney pipe. If the chimney penetrates an overhang, frame for at least 2 inches of clearance and install a Roof Flashing and Storm Collar as described in Steps 9 & 10 for Ceiling Supported Installations (page 10 & 11). Another option is to cut away the overhang for a 2 inch clearance (Fig 24). If the chimney extends more than 5 feet above the top Wall Bracket or Roof Flashing an Extended Roof Brace is required.

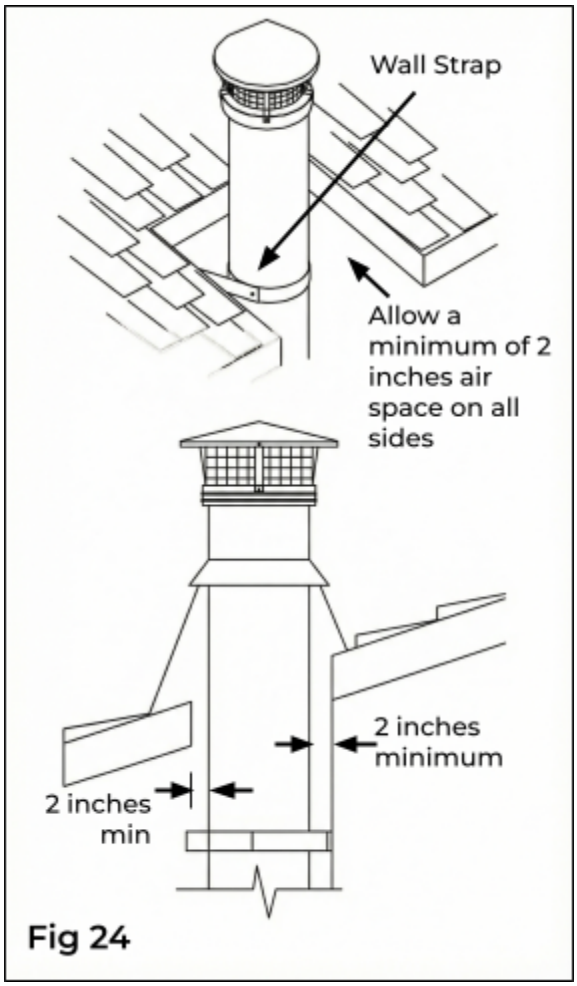

Fig 24

6. **Install Flat Roof Flashing:** A Tee Supported Chimney will perform better if enclosed in a chase, especially in cold climates. If a chase enclosure has been constructed, you can use a

Ventilated Flat Roof Flashing (Fig 25) to seal the chase.

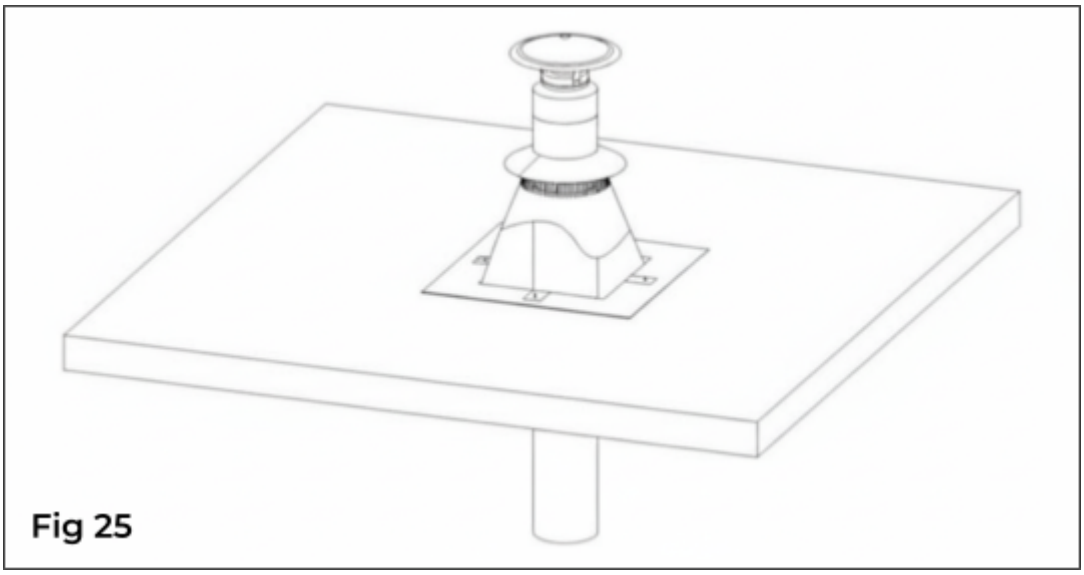

Fig 25

Table 3

Example shows fireplace opening as 30 inches wide, 30 inches height, and the chimney height as 25 feet. The correct flue size for the sample problem is 12 inches diameter.

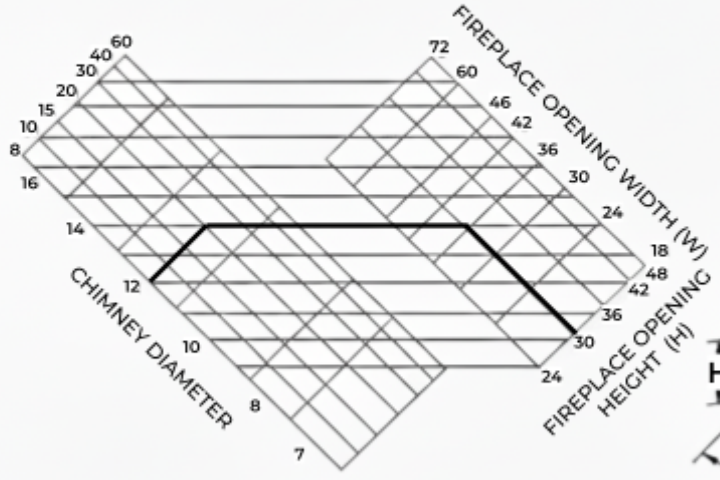

Bold line represents sample problem.

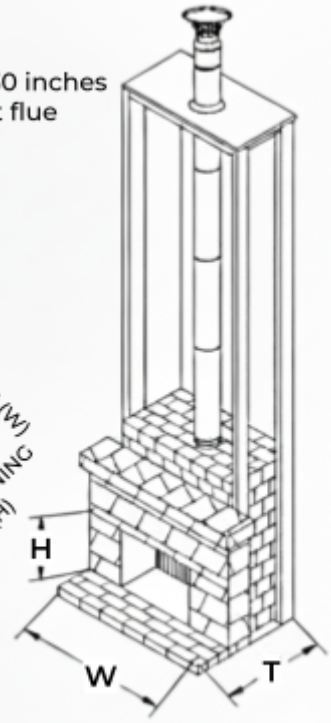

Masonry Fireplace Installations

1. **Determine Chimney Size:** Use table 3 to determine the correct diameter chimney for your fireplace.

2. **Mount Anchor Plate:** Chimneys for masonry fireplaces begin with an Anchor Plate. Make sure the surface of the masonry chimney has a level surface on which to attach the Anchor Plate. If the top of the masonry does not have a level surface, then you will need to modify the masonry accordingly. Center the Anchor Plate over the masonry flue opening, and seal the Anchor Plate with a high-temperature (1000℉) sealant. Secure Anchor Plate with (4) ¼" x 2" masonry anchors (Fig 26). It is very important that the Anchor Plate is level. Be sure to maintain a 1" minimum clearance to combustibles from the Anchor Plate.

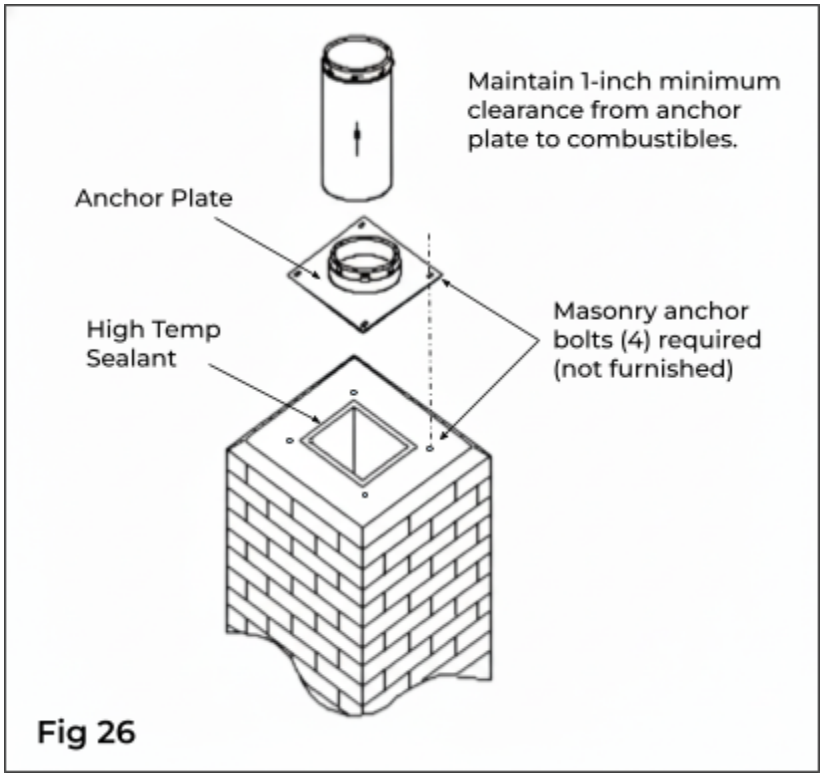

Fig 26

3. **Attach Chimney:** Twist lock the first chimney section clockwise onto the Anchor Plate.

4. **Finish Chimney:** Install the rest of the chimney as directed in the Ceiling Supported Installation section, Steps 4 through 10 (page 8-11). Refer to Figure 1 and Table 3 for chimney height requirements. Always maintain at least 2 inches of clearance to combustible materials, and enclose the chimney where it passes through occupied areas. Use a Wall Bracket for every 8 feet of chimney height.

Zero-Clearance Fireplace Installations

1. **Manufacturer's Instructions:** Carefully read and comply with the manufacturer’s installation instructions for your fireplace. Be sure that MightyVent AF is approved for use with your appliance.

2. **Anchor Plate:** Attach an Anchor Plate to the fireplace top with (4) ⅝” sheet metal screws (Fig 27). Check with the appliance manufacturer about the use of high temperature sealants.

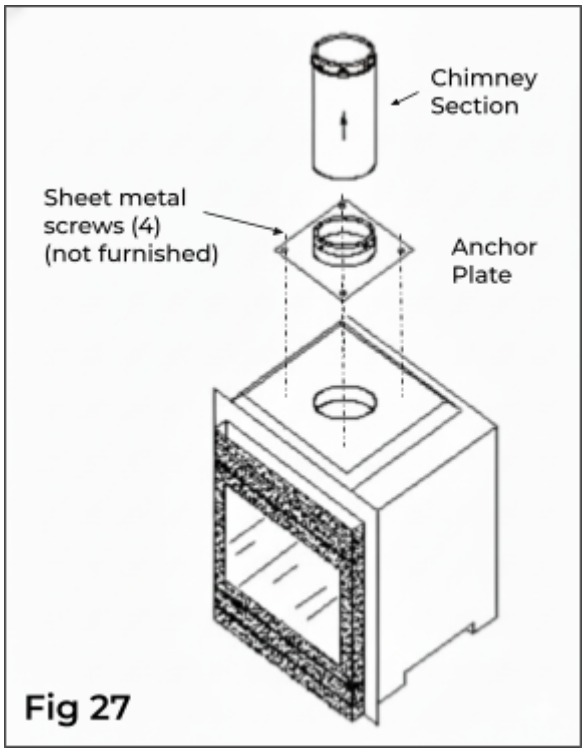

Fig 27

3. **Chimney sections:** Attach a Chimney Section to the Anchor Plate by twist locking clockwise. Secure each joint with a Chimney Pipe Clamp.

4. **Completion:** Install the remainder of the chimney as instructed for a standard Ceiling Supported Installation, Steps 4 through 10 (page 8-11) (using a Firestop Radiation Shield in the 1st floor ceiling instead of the Support Box). Always maintain at least 2 inches of clearance to combustibles, and enclose the chimney where it passes through occupied areas.

Chimney Maintenance

1. **Creosote and Soot Formation and Need for Removal:** When wood is burned slowly, it produces tar and other organic vapors, which combine with expelled moisture to produce creosote. The creosote vapors condense in the relatively cool chimney flue of a slow-burning fire. As a result, creosote residue accumulates on the flue lining. When ignited, this creosote makes an extremely hot fire, known as a chimney fire.

2. **Access:** Chimneys must be installed so that access is provided for inspection and cleaning.

3. **When to Clean:** The chimney should be inspected at least once every month during the heating season to determine if creosote or soot has built up. Check spark arrestor screens at least every 2 to 4 weeks. If creosote or soot has accumulated, it should be cleaned or replaced to reduce the risk of a chimney fire.

4. **How to Clean:** Have your chimney cleaned by a professional chimney sweep if you have doubts about your ability to clean it. Use a plastic/poly brush. Do not use a steel brush that will scratch the stainless steel liner of your chimney. Scrub the spark arrestor with a wire brush. To remove the Chimney Cap for cleaning, either twist counter-clockwise and remove the entire cap, or unscrew the 4 screws that attach the caps support legs to the cap base. The Tee Cleanout Cap can be removed by turning counter-clockwise. Be sure to replace the Tee Cleanout Cap when you are finished cleaning the chimney.

5. **Coal:** To reduce corrosion in chimneys where coal is burned, clean the chimney thoroughly within 48 hours of shutting down the stove for the season.

6. **Chemical Cleaners:** Use chemical cleaners only as a last resort, and use only those that the manufacturer specifically warrants as being non-corrosive to the chimney liner. MightyVent will assume no liability for damage resulting from the use of chemical cleaners.

7. **In Case of Fire:** If a chimney fire occurs, close all appliance air inlets, and call your local fire department. Do **NOT** use the chimney again until it has been inspected for possible damage.

8. **Painting:** As an option, you can coat all exterior metal parts, with the exception of the Chimney Cap, with high-temperature, rust-proof paint. Wash the metal with a vinegar and water solution before painting to remove oils.

9. **Creosote Formation:** MightyVent assumes no liability for any structure damage or roof contamination as the result of creosote formation. It is the owner's responsibility to comply with inspection and cleaning requirements as described in these instructions, and those of the appliance manufacturer.

Warranty

MightyVent LLC warrants that your MightyVent brand parts will be free of defects in materials or workmanship for a period of five (5) years from the date that the product left the distributor's facility. For any defects covered under this warranty, we will, at our discretion, repair or replace your item, or refund your money up to the full purchase price of the defective item.

This warranty only covers the original purchaser of the items from an authorized distributor, does not cover malfunction due to misuse, abuse, or improper installation or maintenance; does not cover the cost of shipping or installation; does not cover incidental, consequential, or indirect damages; and is limited in value to the original purchase price of the defective item.

For warranty claims, please email support@mightyvent.com or visit our website mightyvent.com.